Ann. Bot. Fennici 53: 415–425 ISSN 0003-3847 (print) ISSN 1797-2442 (online)
Helsinki 3 November 2016 © Finnish Zoological and Botanical Publishing Board 2016

Effect of electricity pylons on plant biodiversity in intensive farmland in Poland

Przemysław Kurek[1,*], Tim H. Sparks[2], Blanka Wiatrowska[3], Kaja Rola[4] & Piotr Tryjanowski[2]

[1)] *Department of Ecology, Institute of Botany, Polish Academy of Sciences, ul. Lubicz 46, PL-31-512 Kraków, Poland (*corresponding author's email: p.kurek@botany.pl)*
[2)] *Institute of Zoology, Poznań University of Life Sciences, ul. Wojska Polskiego 71C, PL-60-625 Poznań, Poland*
[3)] *Department of Forest Botany, Poznań University of Life Sciences, ul. Wojska Polskiego 71D, PL-60-625 Poznań, Poland*
[4)] *Department of Plant Taxonomy, Phytogeography and Herbarium, Institute of Botany, Jagiellonian University, ul. Kopernika 27, PL-31-501 Kraków, Poland*

Received 12 Nov. 2015, final version received 19 May 2016, accepted 20 May 2016

Kurek P., Sparks T.H., Wiatrowska B., Rola K. & Tryjanowski P. 2016: Effect of electricity pylons on plant biodiversity in intensive farmland in Poland. — *Ann. Bot. Fennici* 53: 415–425.

In 2013 we surveyed 116 plots under electricity pylons and 116 reference plots. The basal areas of pylons were 6 m^2, 21 m^2 or 32 m^2. Plots under pylons had higher total numbers of species than reference plots, with grassland plots as an exception. Herbaceous species occurring exclusively within pylon plots were more numerous than those exclusively in reference plots (with the exception of grassland). Pylon plots also had a higher Shannon's diversity index (H') of herbaceous plant species, again with the exception of grassland plots. Species number and H' increased with increasing plot area under pylons among cereal and maize fields. A different trend was recorded in grassland; with increasing plot size the differences in species richness and diversity between pylon and reference plots became less distinct. Regardless of plot area, the Jaccard index was usually low and did not exceed a value of 0.20. It may be concluded that electricity pylons act as refuges for many plant species, which makes them biodiversity hotspots in farmland. Species richness and diversity under pylons differs markedly from those of nearby farmland. Such vegetation patches under electricity pylons form a substantial network of floristically diverse refuges within an unfavourable matrix.

Introduction

Farmland constitutes a man-made open environment inhabited by many habitat-specific plant and animal species that occur nowhere else (Green *et al*. 2005). The species diversity of Europe as a whole depends strongly on species diversity in farmland, since farmland covers a substantial part of the continent. It is now clear that rapid agricultural intensification is accompanied by a steep decline in biodiversity as measured across many different taxa (Kleijn & Verbeek 2000, Benton *et al*. 2003, Hovd & Skogen 2005). Agricultural intensification is usually associated with simplification of crop rotation, mechanisation, agrochemical nutrition, crop protection and grassland

improvement (Benton *et al*. 2003). In response to this situation, some European governments are encouraging farmers to increase the percentage of semi-natural habitat in agricultural landscapes in order to reverse the observed decline of some taxa (Thomas & Marshall 1999).

Many authors have reported that habitat heterogeneity is the key to species diversity in farmland (Freemark *et al*. 2002, Benton *et al*. 2003, Hoste-Danyłow *et al*. 2010). This heterogeneity usually depends on the presence of field margins (grass margins, strips), linear scrub along field boundaries (hedges), woodland, ponds, road verges and fallow land (Ratyńska & Szwed 1995, Benton *et al*. 2003, Suárez-Esteban *et al*. 2003, Hovd & Skogen 2005). Field margins increase the mosaic character of arable landscapes and are known to improve biodiversity through increasing the availability of semi-natural habitats. However, agricultural intensification has caused the loss of many such habitats (Woodcock *et al*. 2005). In the present paper, we consider a field margin-like habitat in the form of non-cropped areas under electricity pylons, which may play an important role in shaping butterfly populations (Berg *et al*. 2011, 2013) and bird communities (Tryjanowski *et al*. 2013), and also serve as foci for invasive fleshy-fruited plants (Kurek *et al*. 2015).

A great deal of research on maintaining field margins has focussed on birds (Tryjanowski 1999, Vickery *et al*. 2009, Wuczyński *et al*. 2011) and, sometimes, on less-studied groups of animals, such as butterflies, beetles, spiders (Baines *et al*. 1998, Woodcock *et al*. 2005, Berg *et al*. 2011, 2013) and even soil macrofauna (Smith *et al*. 2008). Faunal diversity is generally correlated with floral diversity (Thomas & Marshall 1999), but the number of papers stressing the importance of field margins in shaping the diversity of plants is noticeably smaller. Some authors have claimed that, in certain regions, little attention has been paid to the importance of the mosaic of farmland habitats for the conservation of native plant species (Freemark *et al*. 2002). From an ecological point of view, field margins may provide a very important habitat for plants needing more than one year to mature (i.e. biennials, perennials) and for species intolerant of annual disturbances such as ploughing, grazing and mowing. Given the rapid agricultural intensification, especially the use of herbicides and seed dressings, field margins become the only remaining areas available for rare arable weeds (as well as for alien plant species; *see* Dajdok & Wuczyński 2008), of which many are seriously threatened (Zając *et al*. 2009). Therefore, examination of species diversity under electricity pylons is crucial for understanding the role they may play in maintaining plant diversity.

This paper reports on a comprehensive study in Poland of herbaceous plant species richness and diversity under electricity pylons in comparison with control areas. We tested the following hypotheses: (1) electricity pylons act as refuges for many plant species, which would make them biodiversity hotspots in farmland; and (2) species richness under electricity pylons differs markedly from that of nearby farmland. To assist in the study of these hypotheses we set the following aims: (1) to determine if plant species diversity under pylons differs among various surrounding crops (cereals, maize, grassland); (2) to verify what kind of impact (qualitative, with effects on plant species composition, or quantitative, with effects on plant species frequency and abundance) the basal area of pylons has; and (3) to assess whether pylon basal area or type of surrounding crop (cereals, maize or grassland) is more important for shaping the diversity of herbaceous plant species.

Material and methods

Study area

The study was conducted in June and July 2013 in the Wielkopolska province of western Poland (centred on 52°N, 16°E). The landscape was dominated by fields with intensive agriculture interspersed with numerous small and isolated forest patches. The main crops were cereals (*Secale cereale*, *Hordeum vulgare*, *Avena sativa*), maize (*Zea mays*), and grassland occurring on humid soils and in the flood plains of river valleys (for further details, *see* Tryjanowski 1999). Soil moisture was the major determinant of the semi-natural herb layer composition, which varied from phytocenoses dominated by *Festuca ovina s. lato* (drier habitats with more sandy

soils) to those dominated by *Phragmites australis* (humid habitats with more organic soils).

The study was carried out under three types of power lines (110 kV, pylon basal area 6 m^2; 220 kV, 21 m^2; 400 kV, 32 m^2), each with different pylon structures located in open fields. We randomly chose from a map three power lines running across the study area and surveyed 116 sites under pylons (51 of 110 kV, 35 of 220 kV and 30 of 400 kV). Reference plots of the same size were located 100 m away, under power lines between pylons in open fields. Under pylons, the vegetation was managed by electricity companies through irregular but repeated cutting of trees and shrubs; therefore the areas under pylons were generally maintained as open areas. The herb layer under pylons was usually unaffected by ploughing. The vegetation under pylons was very diverse; from short and sparse (especially grasses: *Corynephorus canescens*, *Festuca ovina s. lato*) to tall dense ground cover (*Elymus repens, Phragmites australis*). Seedlings and saplings of shrubs and trees occurred in high density and in some cases covered almost the whole area under pylons.

Herbaceous plant species richness, surrounding crop (cereals, maize, grassland) and pylon basal area was recorded for each plot (n = 232). For each plot, the abundance of each plant species in the herb layer was estimated on the Braun-Blanquet scale (coded: 1–6, where 1: < 1% cover; 2: 1%–5% cover; 3: 6%–25% cover; 4: 26%–50% cover; 5: 51%–75% cover; and 6: > 75% cover). Plant nomenclature follows Mirek *et al*. (2002).

Data analysis

Prior to statistical testing, data were transformed with logarithmic or exponential functions to obtain a normal or a symmetrical distribution. To quantify the effect of the pylons on species diversity we analysed the data in two steps. In the first step, the data (herbaceous species number and Shannon's diversity index H') were analysed for pairs of pylon plots and reference plots by paired t-test with the Bonferroni correction for three repetitions (i.e. for each plot size, Fig. 1). In the second step, the data were analysed for pylon plots only (i.e. excluding data from reference plots, Fig. 2). ANCOVA was used to establish the effects of surrounding crop (categorical predictor) and plot size (continuous factor) on species richness and Shannon's diversity index. Statistical analyses were performed with STATISTICA ver. 9, CANOCO ver. 4.5 (ter Braak & Šmilauer 2002), R ver. 2.13.1 (R Development Core Team 2009) and MVSP ver. 3.1 (Kovach 1999).

To investigate plant groups, an indirect gradient analysis, detrended correspondence analysis (DCA), was used with default settings, without transformation and downweighting of rare species. This enabled recognition of the main gradients of herbaceous plant species' occurrence across the different surrounding crops. The main criteria to distinguish these gradients were the presence of species and their habitat requirements. To render the analysis transparent and clear, plant species occurring in less than 10% of the plots (fewer than 12 plots) were excluded from the DCA. This eliminated the potential influence of sporadically occurring species on the results (e.g., Kurek & Cykowska-Marzencka 2016).

To compare herbaceous species diversity between plots, Shannon's diversity index (H') of diversity was calculated according to the formula: $H' = -\sum_{i=1}^{S} p_i \ln p_i$, where S is the species richness and p_i is the proportion of abundance (expressed on the Braun-Blanquet scale) of the ith species. The Jaccard index was calculated as follows: $J = S_{ab}/(S_a + S_b - S_{ab})$, where S_{ab} is the number of plant species that occurred in plots of both types, and S_a, S_b are the numbers of plant species that occurred in one type of plot (a or b) only. J takes values in the range of 0 to 1, where 1 indicates a complete similarity between communities. Indicator species analysis (Dufrene & Legendre 1997) was performed using the *indval* function from the *labdsv* package (http://ecology.msu.montana.edu/labdsv/R) to reveal which herbaceous plant species were significantly more frequent depending on plot size (reference plots were excluded).

Results

A total of 180 herbaceous species was recorded

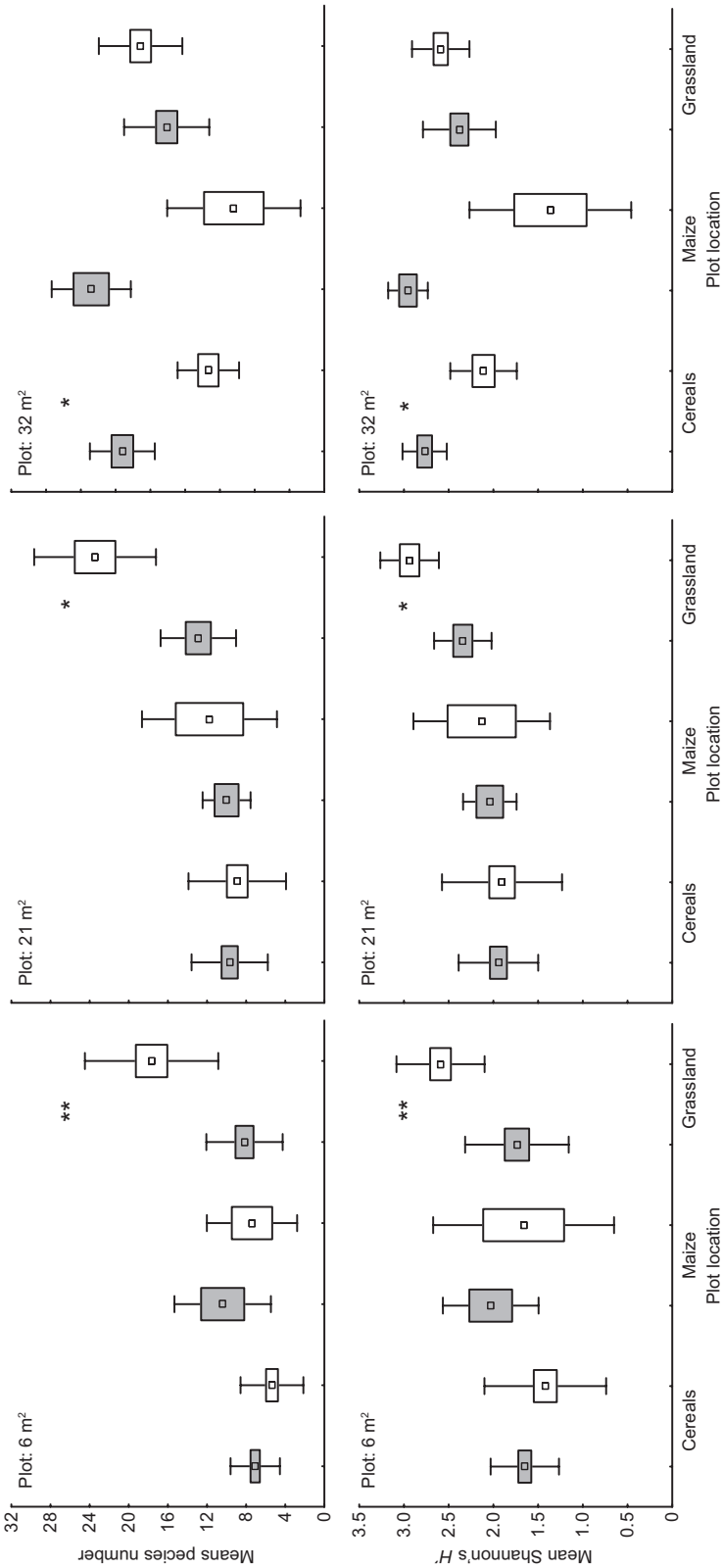

Fig. 1. Mean herbaceous plant species number and Shannon's *H'* index for different sizes of pylon plot (grey) and reference plot (white), depending on the surrounding crop. Squares within indicate mean values; box limits are ± 1 SE; whiskers extend to ±1 SD. * $p < 0.05$, ** $p < 0.001$.

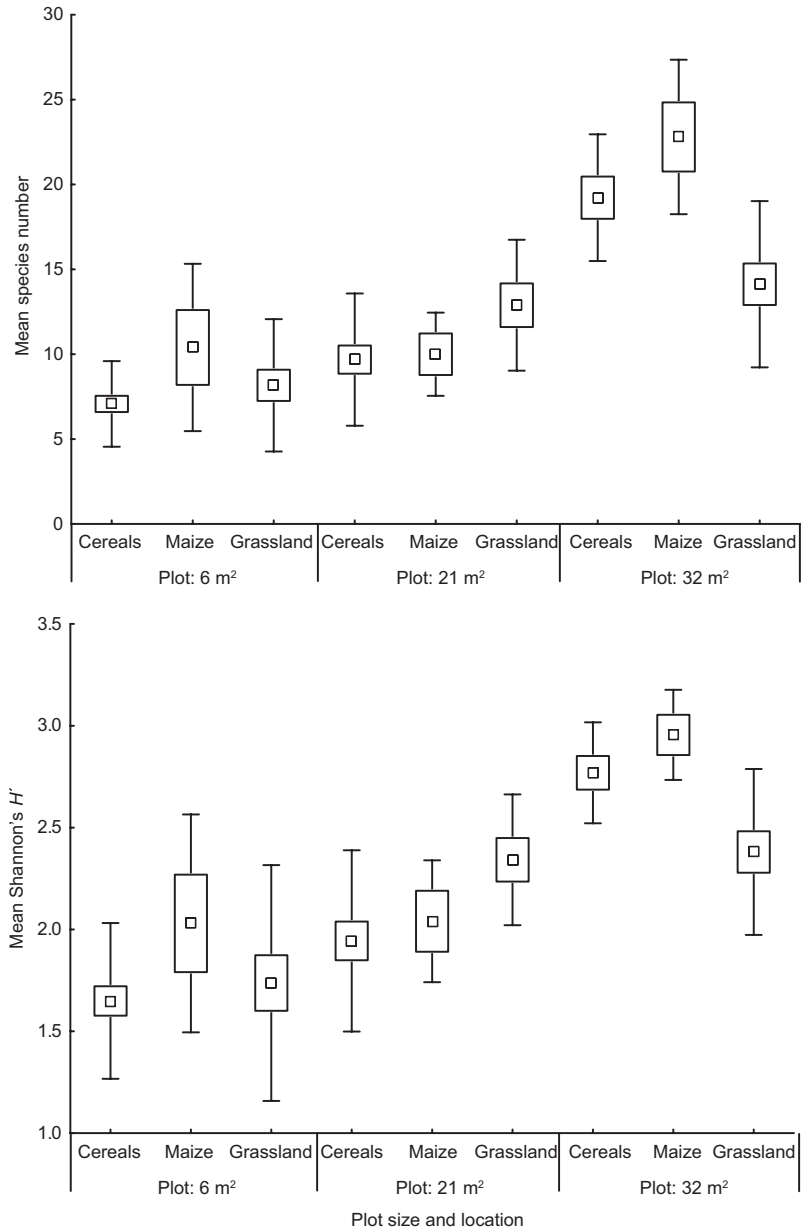

Fig. 2. Mean herbaceous plant species number and Shannon's *H′* index on pylon plots of the same size, depending on the surrounding crop (cereals, maize or grassland). Squares within boxes indicate mean values; box limits are ±1 SE; whiskers extend to ±1 SD.

in the survey. Pylon plots had higher total numbers of species in comparison to reference plots, with grassland as an exception (cereals: pylon plots 93, reference plots 64; maize: 62 and 55; grassland: 98 and 119). A greater share of herbaceous species occurred exclusively in pylon plots than in reference plots, again with the exception of grassland (cereals: pylon plots 51.6%, reference plots 29.7%; maize: 50.0% and 43.6%; grassland: 17.3% and 31.9%).

We analysed the differences in mean herbaceous species number and *H′* between pylon plots and reference areas, and within pylon plots. The greatest differences in the mean herbaceous species number and *H′* between pylon plots and reference plots were observed for the largest plot area, i.e. 32 m^2 (in cereals and maize) but this difference diminished in grassland (Fig. 1). Among plots with areas of 6 m^2 and 21 m^2 there were no differences, except in grassland, where plant spe-

cies richness and H' differed significantly. Only in grassland were there higher mean number of plant species and H' recorded in the reference plots. Species richness was highly and positively affected by plot size (ANCOVA: $F_{1,112} = 71.69$, $p < 0.00001$) and also depended on the surrounding crop ($F_{2,112} = 3.02$, $p = 0.053$). A *post-hoc* Tukey test showed that there was a significant difference between pylons surrounded by cereals and maize ($p = 0.002$). Shannon's diversity index (H') was positively affected by plot size (ANCOVA: $F_{1,112} = 64.86$, $p < 0.00001$) but was not depended on the surrounding crop ($F_{2,112} = 2.81$, $p = 0.064$). A *post-hoc* Tukey test also showed that there was a difference between pylons surrounded by cereals and maize ($p = 0.003$). The basal area of the pylon plot had a positive effect on the mean number of herbaceous plant species and on H'. When comparing the number of plant species and H' regarding plot size, the highest values were found in pylons surrounded by maize (Fig. 2).

Under pylons, some plant species occurred significantly more frequently (indicator species analysis) as pylon plot area increased. There were no herbaceous species significantly associated with the smallest pylon plots (6 m^2) but, in larger plots (21 m^2 and 32 m^2), 8 and 18 plant species, respectively, occurred significantly more frequently under pylons among cereals, maize, as well as grassland (Table 1).

Mean Jaccard indexes indicated a rather low level ($J < 0.20$) of similarity between pylon and reference plots regardless of the surrounding crop (Table 2). There was no dependence

Table 1. Plant species significantly more frequent in pylon plots located among either cereals, maize or grassland, their overall occurrence in 116 pylon plots, and indicator values (significant in boldface with precise *p* values). In 6-m^2 plots, there were no significantly more frequent plants species, hence the data for this plot type are not shown.

Plant species	Occurrence	Indicator values (*p*)		
		Cereals	Maize	Grassland
Plot area: 6 m^2	–	–	–	–
Plot area: 21 m^2				
Holcus lanatus	38	**0.271** (0.024)	0.050 (n.s.)	0.074 (n.s.)
Festuca ovina	1	0.000 (n.s.)	**0.250** (0.032)	0.000 (n.s.)
Setaria viridis	1	0.000 (n.s.)	**0.250** (0.031)	0.000 (n.s.)
Anthyllis vulneraria	3	0.000 (n.s.)	0.000 (n.s.)	**0.333** (0.012)
Angelica sylvestris	11	0.000 (n.s.)	0.000 (n.s.)	**0.307** (0.010)
Phragmites australis	13	0.000 (n.s.)	0.000 (n.s.)	**0.286** (0.016)
Juncus conglomeratus	8	0.010 (n.s.)	0.000 (n.s.)	**0.229** (0.036)
Cirsium oleraceum	2	0.000 (n.s.)	0.000 (n.s.)	**0.222** (0.016)
Plot area: 32 m^2				
Conyza canadensis	20	**0.303** (0.011)	0.273 (n.s.)	0.001 (n.s.)
Galium aparine	55	**0.246** (0.027)	0.199 (n.s.)	0.095 (n.s.)
Bromus tectorum	4	**0.230** (0.018)	0.062 (n.s.)	0.000 (n.s.)
Aethusa cynapium	3	0.000 (n.s.)	**0.600** (0.001)	0.000 (n.s.)
Rumex thyrsiflorus	14	0.025 (n.s.)	**0.489** (0.001)	0.008 (n.s.)
Artemisia vulgaris	26	0.239 (n.s.)	**0.368** (0.010)	0.014 (n.s.)
Cirsium arvense	27	0.117 (n.s.)	**0.338** (0.005)	0.248 (n.s.)
Geranium pusillum	7	0.046 (n.s.)	**0.332** (0.007)	0.004 (n.s.)
Anchusa arvensis	3	0.024 (n.s.)	**0.313** (0.014)	0.000 (n.s.)
Convolvulus arvensis	10	0.115 (n.s.)	**0.299** (0.010)	0.000 (n.s.)
Fallopia convolvulus	35	0.226 (n.s.)	**0.285** (0.010)	0.018 (n.s.)
Matricaria inodorum	23	0.171 (n.s.)	**0.246** (0.027)	0.000 (n.s.)
Potentilla anserina	9	0.000 (n.s.)	0.000 (n.s.)	**0.355** (0.006)
Carex sp.	9	0.010 (n.s.)	0.000 (n.s.)	**0.307** (0.016)
Urtica dioica	45	0.092 (n.s.)	0.004 (n.s.)	**0.283** (0.018)
Phalaris arundinacea	28	0.000 (n.s.)	0.056 (n.s.)	**0.246** (0.040)
Leontodon sp.	3	0.000 (n.s.)	0.000 (n.s.)	**0.188** (0.041)
Filipendula ulmaria	5	0.000 (n.s.)	0.000 (n.s.)	**0.173** (0.049)

between plot area in different crops and mean Jaccard index (Spearman rank-order correlation: $r_s = 0.105$, $p = 0.787$).

DCA distinguished four groups of plant species (Fig. 3): (1) herbaceous plant aggregations associated with grassland reference plots, (2) herbaceous plant aggregations associated with grassland pylon plots, (3) a mixed group of pylon plots surrounded by cereals and maize, and (4) a mixed group of reference plots surrounded by cereals and maize. It is worth noting that in grassland, pylon and reference plots had clearly different aggregations (groups). Grassland pylon plots were characterized by a high abundance of species such as *Urtica dioica*, *Phragmites australis* and *Phalaris arundinacea*. These species formed monospecific stands and constituted the main component in plant aggregations under pylons. Other plot types were rarely dominated by a single or few plant species. There was also a very remarkable convergence (Fig. 3): while cereal and grassland reference plots are far apart, cereal and grassland pylon plots are adjacent to each other and partly intermingle.

Two habitat gradients were identified. A fertility/cultivation regime gradient ran from the grassland species *Deschampsia caespitosa* (lower right in Fig. 3) to the cereal field species *Echinochloa crus-galli* (upper left in Fig. 3). The second was a moisture gradient running from the grassland species *Equisetum palustre* (upper right in Fig. 3) to the cereal field species *Anthoxanthum aristatum* (lower left in Fig. 3) characteristic of drier habitats. There was an accumulation of transition species characteristic of both grassland and arable in the middle of the quality gradient (i.e. *Leontodon* sp., *Achillea millefolium*, *Conyza canadensis*, *Dactylis glomerata*, *Taraxacum officinale*) running from the upper left to the lower right side (Fig. 3). The eigenvalues of axes 1 and 2 were 0.555 and 0.381, respectively; the length of the gradients were 3.545 and 0.545, respectively.

Discussion

The presence of electricity pylons in intensive agricultural landscapes causes positive qualitative and quantitative changes in plant species aggregations. This is a kind of paradox, given the landscape-damaging effect of huge pylons on the one hand and their contribution to preservation of species richness on the other, as was demonstrated also for birds in open landscapes (Tryjanowski *et al*. 2013). Regardless of their negative aesthetic impact on landscapes, pylons may serve as refuges for some plant species, thus enriching diversity in the ecosystem. In general, pylon plots were associated with higher species richness and *H´* diversity indices of herbaceous plant species, with grassland as an exception. In terms of species richness and *H´*, pylons surrounded by grassland do not play a role as a diversity island, as they had a lower number of species and *H´* than their corresponding reference plots. This suggests that pylons play a different role in shaping plant species diversity when surrounded by cereals or maize than when surrounded by grassland.

Parallel to quantitative changes, and equally important, are qualitative changes in plant aggregations under pylons. In general, the similarity between pylon plots and reference plots was low. This applies to plots located among cereals, maize and grassland regardless of plot area, suggesting that quantitative traits of plant aggregations (species richness and species diversity) are more dependent on plot area and type of crop surrounding the plot than are qualitative traits expressed via the Jaccard index. Plant aggregation uniqueness measured exclusively by numbers of species occurring in plots (Jaccard formula; *see* Material and methods) does not depend on plot area and has low values. The qualitative distinctness of marginal habitats is enhanced by the variety of plant aggregations occurring within them. Moreover, undisturbed pylon plots may be refuges for perennials and

Table 2. Mean ± SD Jaccard indexes for plot pairs (pylon and reference) in cereals, maize and grassland for three categories of plot area.

Plot area	Cereals	Maize	Grassland
6 m²	0.154 ± 0.120	0.142 ± 0.057	0.122 ± 0.089
21 m²	0.142 ± 0.102	0.160 ± 0.047	0.196 ± 0.107
32 m²	0.148 ± 0.057	0.121 ± 0.089	0.176 ± 0.088

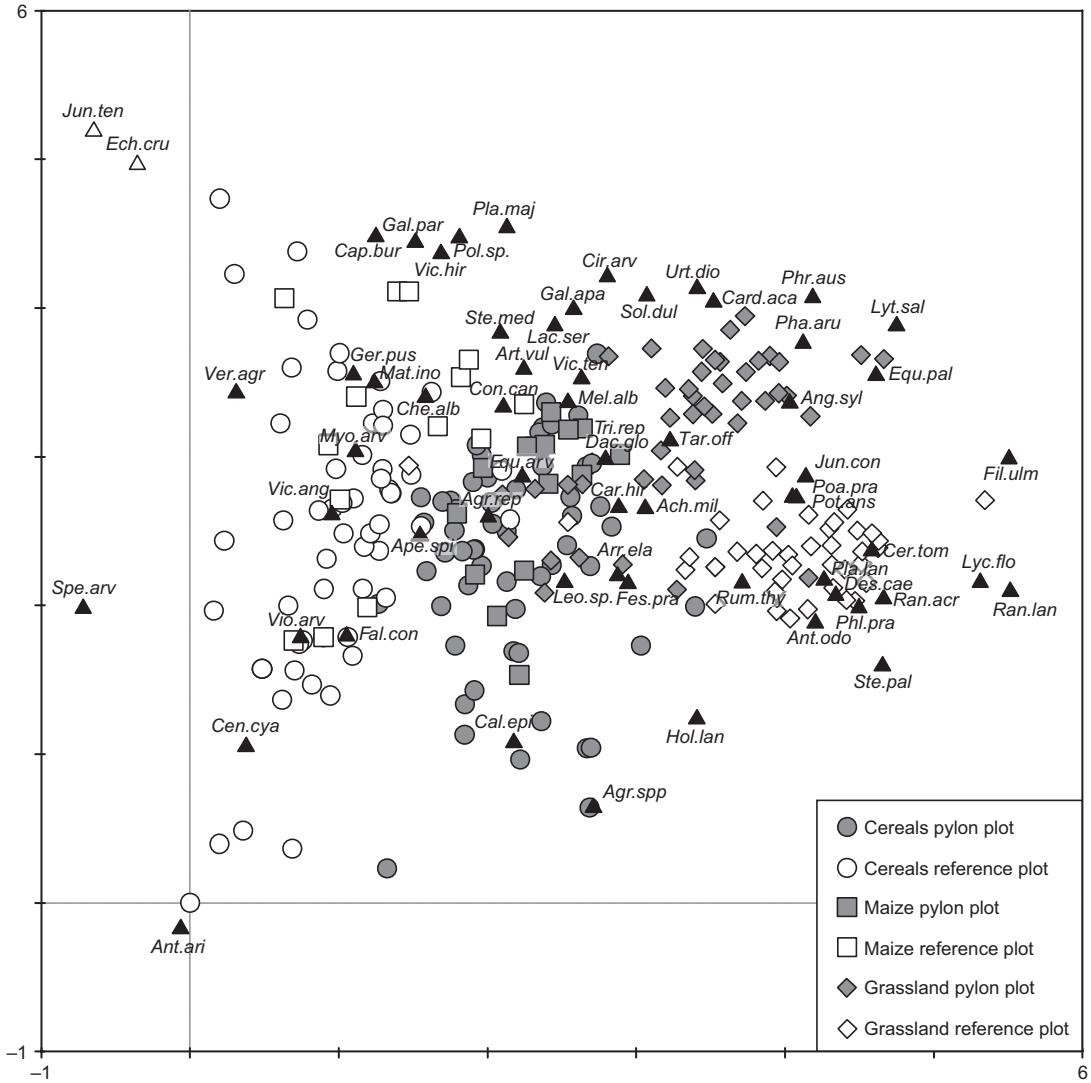

Fig. 3. Detrended correspondence analysis (DCA) scatterplot showing the relationship between plot type and herbaceous species composition for 232 study plots on the first two axes. Abbreviations of species are as follows: *Ach. mil* = *Achillea millefolium*, *Agr.rep* = *Agropyron repens*, *Agr.spp* = *Agrostis spp.*, *Ape.spi* = *Apera spica venti*, *Ang. syl* = *Angelica sylvestris*, *Ant.odo* = *Anthoxanthum odoratum*, *Ant.ari* = *A. aristatum*, *Arr.ela* = *Arrhenatherum elatius*, *Art.vul* = *Artemisia vulgaris*, *Cal.epi* = *Calamagrostis epigejos*, *Cap.bur* = *Capsella bursa pastoris*, *Card.aca* = *Carduus acanthoides*, *Car.hir* = *Carex hirta*, *Cen.cya* = *Centaurea cyanus*, *Cer.tom* = *Cerastium tomentosum*, *Che.alb* = *Chenopodium album*, *Cir.arv* = *Cirsium arvense*, *Con.can* = *Conyza canadensis*, *Dac.glo* = *Dactylis glomerata*, *Des.cae* = *D. caespitosa*, *Ech.cru* = *Echinochloa crus galli*, *Equ.arv* = *Equisetum arvense*, *Equ.pal* = *E. palustre*, *Fal.con* = *Fallopia convolvulus*, *Fes.pra* = *Festuca pratensis*, *Fil.ulm* = *Filipendula ulmaria*, *Gal.par* = *Galinsoga parviflora*, *Gal.apa* = *Galium aparine*, *Ger.pus* = *Geranium pusillum*, *Hol.lan* = *Holcus lanatus*, *Jun.con* = *Juncus conglomeratus*, *Jun.ten* = *J. tenuis*, *Lac.ser* = *Lactuca serriola*, *Leo.sp.* = *Leontodon sp.*, *Lyc.flo* = *Lychnis flos cuculi*, *Lyt.sal* = *Lythrum salicaria*, *Mat.ino* = *Matricaria inodorum*, *Mel.alb* = *Melandrium album*, *Myo.arv* = *Myosotis arvensis*, *Pha.aru* = *Phalaris arundinacea*, *Phl.pra* = *Phleum pretense*, *Phr.aus* = *Phragmites australis*, *Pla.maj* = *Plantago major*, *Pla.lan* = *P. lanceolata*, *Poa.pra* = *Poa pratensis*, *Pol.sp.* = *Polygonum sp.*, *Pot.ans* = *Potentilla anserina*, *Ran.acr* = *Ranunculus acris*, *Ran.lan* = *R. lanuginosus*, *Rum.thy* = *Rumex thyrsiflorus*, *Spe. arv* = *Spergula arvensis*, *Ste.med* = *Stellaria media*, *Ste.pal* = *S. palustris*, *Sol.dul* = *Solanum dulcamara*, *Tar.off* = *Taraxacum officinalis*, *Tri.rep* = *Trifolium repens*, *Urt.dio* = *Urtica dioica*, *Ver.agr* = *Veronica agrestis*, *Vic.hir* = *Vicia hirsuta*, *Vic.ang* = *V. angustifolia*, *Vic.ten* = *V. tenuifolia*, *Vio.arv* = *Viola arvensis*.

even woody species (Kurek *et al*. 2015), because repeated disturbance occurring especially in arable fields creates conditions more favourable for annual species (Marshall & Moonen 2002). Qualitative and quantitative traits of plant aggregations show that marginal habitats among farmland play a key role in increasing biodiversity and, apparently, species diversity and species richness as well (Benton *et al*. 2003, Czarnecka 2006, Hoste-Danyłow *et al*. 2010). Our results confirmed this, showing that electricity pylons may also act as plant biodiversity refuges.

Only in larger pylon plots located among cereals, maize or grassland did their own characteristic plant species occur more frequently. This means that only larger pylons may play a significant role in the settlement and persistence of several plant species. These species may form clearly separated monospecific aggregations (groups). Dominant plant species such as *Urtica dioica*, *Phragmites australis*, *Phalaris arundinacea*, and *Galium aparine* were abundant under the pylons in grassland and arable fields (Table 1); they are strong competitors compared with other herbaceous species, and may prevent colonisation by other plants (Orczewska 2009). These species usually formed monospecific assemblages and were the main component in plant aggregations under the pylons among grassland. Dense assemblages of *Urtica dioica* and *Phragmites australis* (the latter also occurring in the study area, but with a lower frequency) are known to reduce species diversity (Dajdok & Wuczyński 2008, Kurek *et al*. 2016). Such competitive exclusion supports the inhibition model of succession *sensu* Connell and Slatyer (1977). Other plot types were rarely dominated by a single or several plant species. This confirmed that domination by several plant species may effectively influence values of similarity and diversity indices. The contrasts between the pylon and reference plots in grassland and arable areas confirm that both pylon basal area and type of crop (cereals, maize or grassland) has an effect on the richness and diversity of herbaceous plant species (Fig. 1). Only in the pylon plots in grassland was the mean value of species number and H' lower than in the reference plots.

Many authors discuss the importance of various factors behind species richness of herbaceous plants in farmland margins. The surface area of the refuge seems to be a very important factor (Cole 1981, Deshaye & Morisset 1989, Zacharias & Brandes 1990). From the point of view of nature conservation, the largest nature refuges should be supported to prevent or minimise negative impacts from outside. Some authors have stated that large refuges will preserve more species than a series of smaller ones (Cole 1981). Refuges may be suitable for rare plant species (Wuczyński *et al*. 2014), but investigation has revealed that occasional and rare species often occur exclusively in large margins (Deshaye & Morisset 1989, Zacharias & Brandes 1990). Nevertheless, pylons may play a role in deforested farmlands or act as supporting habitats in maintaining plant richness and landscape diversity on a scale similar to other habitat patches. It is clear that, regardless of margin area, other factors (e.g. shape, isolation, cover of shrubs and tree layers) also affect plant species richness and diversity (Dzwonko & Loster 1988).

Published data reveal that species richness does not increase linearly with plot area (Wójcik 1991). The same conclusion is reached for species diversity. As forest patch areas increase, the share of plants associated with grassland and dry grasslands decreases, while the contribution of forest species rises (Wójcik 1991). Our results, however, obtained for much smaller plots, confirmed that larger basal areas of pylons supported higher numbers of herbaceous plant species. However, even under the smallest pylons, with basal areas of 6 m^2, plant aggregations had a low similarity to their surroundings, even if such small-areal aggregations are more susceptible to higher negative pressure from the effect of land cultivation in close proximity (e.g. herbicide inflow).

In discussing the management of many types of field margins, researchers have focused mainly on different linear structures such as ditches, road verges, fences, and hedgerows, which play a very important role in plant species conservation in farmland (Czarnecka 2006, 2011), but also serve as dispersal routes (Suárez-Esteban *et al*. 2013). Such semi-natural areas within arable landscapes are recognised as hotspots of biodiversity for endangered plant and animal species

(Tryjanowski 1999, Wuczyński *et al*. 2014). In intensive farmland, uncropped areas are under pressure of being converted to arable land, and thus long-term persistence of sufficiently large field margins is unlikely. In contrast, vegetation under electricity pylons seems to be a much more persistent element in farmland landscapes; they are not likely to be used as arable land and thus will remain a permanent non-crop habitat.

This investigation revealed that electricity pylons act as refuges for many plant species, which make them biodiversity hotspots in farmland (hypothesis 1) and species richness and diversity under pylons differed markedly from that of nearby crops (hypothesis 2). Our results also suggested that surrounding crop (cereals, maize, grassland) and basal area of the pylons had a relevant impact in qualitative (effects on plant species composition) and quantitative (effects on plant species frequency and abundance) terms. It may be concluded that vegetation patches under electricity pylons form a substantial network of floristically diverse refuges within an unfavourable matrix.

Acknowledgements

We thank local farmers for access to their land. Thanks are extended to Piotr Skórka for valuable remarks on the first version of the manuscript. Urszula Korzeniak helped with the Jaccard's and Shannon's diversity indexes calculations. The study was supported by the statutory fund of the Władysław Szafer Institute of Botany of the Polish Academy of Sciences.

References

Baines M., Hambler C., Johnson P.J., Macdonald D.W. & Smith H. 1998: The effects of arable field margin management on the abundance and species richness of Araneae (spiders). — *Ecography* 21: 74–86.

Benton T.G., Vickery J.A. & Wilson J.D. 2003: Farmland biodiversity: is habitat heterogeneity the key? — *Trends in Ecology and Evolution* 18: 182–188.

Berg Å., Arhné K., Öckinger E., Svensson R. & Söderström B. 2011: Butterfly distribution and abundance is affected by variation in the Swedish forest-farmland landscape. — *Biological Conservation* 144: 2819–2831.

Berg Å., Arhné K., Öckinger E., Svensson R. & Wissman J. 2013: Butterflies in semi-natural pastures and power-line corridors — effects of flower richness, management, and structural vegetation characteristics. — *Insect Conservation and Diversity* 6: 639–657.

Cole B.J. 1981: Colonizing abilities, island size, and the number of species on archipelagoes. — *The American Naturalist* 117: 629–638.

Conell J.H. & Slatyer R.O. 1977: Mechanisms of succession in natural communities and their role in community stability and organization. — *The American Naturalist* 111: 1119–1144.

Czarnecka J. 2006: Roadsides as plant diversity refuges in agricultural landscape. — *Ecological Questions* 7: 37–46.

Czarnecka J. 2011: The role of linear structures in agricultural landscape in the maintenance of xerothermic species. — *Acta Agrobotanica* 64: 151–158.

Dajdok Z. & Wuczyński A. 2008: Alien plants in field margins and fields of southwestern Poland. — *Biodiversity: Research and Conservation* 9–10: 19–34.

Deshaye J. & Morisset P. 1989: Species-area relationships and the SLOSS effect in a subarctic archipelago. — *Biological Conservation* 48: 265–276.

Dufrêne M. & Legendre P. 1997: Species assemblages and indicator species: the need for a flexible asymmetrical approach. — *Ecological Monographs* 67: 345–366.

Dzwonko Z. & Loster S. 1988: Species richness of small woodlands on the western Carpathian foothills. — *Vegetatio* 76: 15–27.

Freemark K.E., Boutin C. & Keddy C.J. 2002: Importance of farmland habitats for conservation of plant species. — *Conservation Biology* 16: 399–412.

Green R.E., Cornell S.J., Scharlemann J.P. & Balmford A. 2005: Farming and the fate of wild nature. — *Science* 307: 550–555.

Hoste-Danyłow A., Romanowski J. & Żmihorski M. 2010: Effects of management on invertebrates and birds in extensively used grassland of Poland. — *Agriculture, Ecosystems and Environment* 139: 129–133.

Hovd H. & Skogen A. 2005: Plant species in arable field margins and road verges of central Norway. — *Agriculture, Ecosystems and Environment* 110: 257–265.

Kleijn D. & Verbeek M. 2000: Factors affecting the species composition of arable field boundary vegetation. — *Journal of Applied Ecology* 37: 256–266.

Kurek P. & Cykowska-Marzencka B. 2016: Badgers *Meles meles* setts and bryophyte diversity: A newly found role for the game animal in European temperate forests. — *Forest Ecology and Management* 372: 199–205.

Kurek P., Sparks T.H. & Tryjanowski P. 2015: Electricity pylons may be potential foci for the invasion of black cherry *Prunus serotina* in intensive farmland. — *Acta Oecologica* 62: 40–44.

Kurek P., Steppa R., Grzywaczewski G. & Tryjanowski P. 2016: The silence of the lambs? Plant diversity in abandoned sheep pens. — *Plant, Soil and Environment* 62: 1–8.

Kovach W.L. 1999: *MVSP — a multivariate statistical package for Windows, ver. 3.1*. — Kovach Computing Services, Pentraeth, UK.

Marshall E.J.P. & Moonen A.C. 2002: Field margins in northern Europe: their functions and interactions with agriculture. — *Agriculture, Ecosystems and Environ-*

ment 89: 5–21.

Mirek Z., Piękoś-Mirkowa H., Zając A. & Zając M. 2002: *Flowering plants and pteridophytes of Poland. A checklist*. — W. Szafer Institute of Botany, Polish Academy of Sciences, Cracow.

Orczewska A. 2009: Migration of herbaceous woodland flora into post-agricultural black alder woods planted on wet and fertile habitats in south western Poland. — *Plant Ecology* 204: 83–96.

R Development Core Team. 2009: *R: a language and environment for statistical computing*. — R Foundation for Statistical Computing, Vienna, Austria.

Ratyńska H. & Szwed W. 1995: Vegetation of forest islands in the agricultural landscape near Poznań (West-Central Poland). — *Thaiszia — Journal of Botany* 5: 159–171.

Smith J., Potts S.G., Woodcock B.A. & Eggleton P. 2008: Can arable margins be managed to enhance their biodiversity, conservation and functional value for soil macrofauna? — *Journal of Applied Ecology* 45: 269–278.

Suárez-Esteban A., Delibes M. & Fedriani J.M. 2013: Unpaved road verges as hotspots of fleshy-fruited shrub recruitment and establishment. — *Biological Conservation* 167: 50–56.

Ter Braak C.J.F. & Šmilauer P. 2002: *CANOCO reference manual and CanoDraw for Windows user's guide*. — Software for Canonical Community Ordination (version 4.5), Microcomputer Power, Ithaca, NY.

Thomas C.F.G. & Marshall E.J.P. 1999: Arthropod abundance and diversity in differently vegetated margins of arable fields. — *Agriculture, Ecosystems and Environment* 72: 131–144.

Tryjanowski P. 1999: Effect of habitat diversity on breeding birds: comparison of farmland bird community in the region of Wielkopolska (W Poland) with relevant data from other European studies. — *Polish Journal of Ecology* 47: 153–174.

Tryjanowski P., Sparks T.H., Jerzak L., Rosin Z.M. & Skórka P. 2013: A paradox for conservation: electricity pylons may benefit avian diversity in intensive farmland. — *Conservation Letters* 7: 34–40.

Vickery J.A., Feber R.E. & Fuller R.J. 2009: Arable field margins managed for biodiversity conservation: a review of food resource provision for farmland birds. — *Agriculture, Ecosystems and Environment* 133: 1–13.

Woodcock B.A., Westbury D.B., Potts S.G., Harris S.J. & Brown V.K. 2005: Establishing field margins to promote beetle conservation in arable farms. — *Agriculture, Ecosystems and Environment* 107: 255–266.

Wójcik Z. 1991: The vegetation of forest islands in agricultural landscape of the Jorka river reception basin in the Masurian Lakeland (north-eastern part of Poland). — *Ekologia Polska* 39: 437–479.

Wuczyński A., Dajdok Z., Wierzcholska S. & Kujawa K. 2014: Applying red lists to the evaluation of agricultural habitat: regular occurrence of threatened birds, vascular plants, and bryophytes in field margins of Poland. — *Biodiversity and Conservation* 23: 999–1017.

Wuczyński A., Kujawa K., Dajdok Z. & Grzesiak W. 2011: Species richness and composition of bird communities in various field margins of Poland. — *Agriculture, Ecosystems and Environment* 141: 202–209.

Zacharias D. & Brandes D. 1990: Species area-relationships and frequency — Floristical data analysis of 44 isolated woods in northwestern Germany. — *Vegetatio* 88: 21–29.

Zając M., Zając A. & Tokarska-Guzik B. 2009: Extinct and endangered archaeophytes and the dynamics of their diversity in Poland. — *Biodiversity: Research and Conservation* 13: 17–24.